Installation instructions

Laminate flooring **332 NP Manhattan**

09|2026

JOKA®

INKU

Laminate flooring - 332 NP Manhattan

JOKA 332 NP Manhattan and INKU 332 NP Manhattan comply with the latest technical standard. To achieve best fitting results and preserve warranty, the following regulations must be kept.

Please read these installation instructions through completely before installation.

Preparation:

The following values apply for residual screed moisture:

Screeds	Permissible residual moisture without hot water underfloor heating	Permissible residual moisture with hot water underfloor heating
Calcium sulphate and calcium sulphate flowing screed	≤ 0.5 CM % ≤ 80% relative humidity	≤ 0.3 CM % ≤ 75% relative humidity
Cement screed	≤ 2.0 CM % ≤ 80% relative humidity	≤ 1.8 CM % ≤ 75% relative humidity

A CM measurement must always be carried out before all installation work!

The CM values apply to both old substrates and new screeds.
KRL method: For old substrates and a normal usage climate (temperatures in the range of 20 to 23 °C, relative humidity by 50%), KRL values are expected to be 50% rel. humidity. If the measured KRL values deviate significantly from this, there may be hidden construction defects. Please also note the TKB leaflet 18, SVL method

Checking the goods before installation:
Before installation, check the goods in daylight for material and transport damage. If faults should be recognised during fitting, further processing must be stopped immediately so that the goods can be inspected or replaced if necessary. Later complaints will not be accepted.

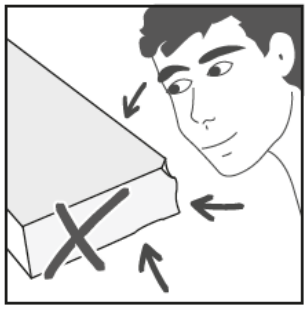

Storage and acclimatisation:
Before you install laminate flooring, you must store the packs in the rooms where they are to be laid or in adjacent rooms with the same room climate for a period of at least 48 hours so that the material can acclimatise. Store the closed packs in small stacks and space the packs out.

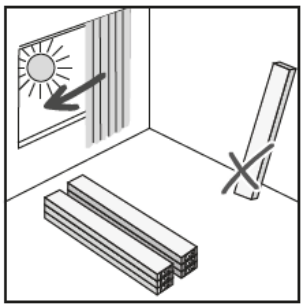

All previous issues are no longer valid on publication of this version! With this information, our intention is to advise you to the best of our knowledge based on the tests we have performed, our experience, the applied standards and the accepted rules of good practice in our trade. The on-site circumstances are not known and must be checked by a specialist, with the construction being adapted if necessary.
W. & L. Jordan GmbH | Horst-Dieter-Jordan-Straße 7-10 | D-34134 Kassel | Tel. +49 56 1 / 941 77 0 | Fax. + 49 56 1 / 941 77 930 | Info@joka.de | http://www.joka.de

The following room climate conditions must be maintained constantly for at least 48 hours before and 48 hours after installation:

Substrate temperature	**:**	**Min. 15 °C – max. 25°C**
Room temperature	**:**	**Min. 18 °C – max. 27°C**
Room air humidity	**:**	**40% to 65% rel. air humidity**

When installing on underfloor heating, it is necessary to keep the underfloor heating in operation with a surface temperature of 18 – 22 °C.

The client is responsible for ensuring the climatic conditions are observed.

Fitting plan:
Prepare an installation plan before starting installation work. Note the expansion and movement joints as well as the room geometry. Generally, installation direction in parallel to the main light source is recommended. Adapt the installation direction to the circumstances in the room if necessary. Narrow and/or long rooms can seem larger if the elements are installed crosswise. Please involve the client in the decision. If the last board row according to measurement is not at least 5 cm wide, cut the first board row in such a way that the first and last row are about the same width.

Substrates:

The substrate must be permanently dry, firm, load-bearing and level. The surface should be sanded and free of dust. The relevant national standards and guidelines, technical references and the recognised rules of the trade apply to the fitting of Deluxe 332 NP Manhattan laminate flooring. In Germany, the following guidelines should be paid particular attention: DIN 18365 "Flooring works" and 18202 "Tolerances in building construction".

Mineral substrates:

1. Mineral substrates must be firm, permanently dry, sufficiently load-bearing and free of dust, solvents, paint, wax, grease and oil.
2. New mineral substrates must be sufficiently dry and pre-treated. The processing company is responsible for this! In the case of priming work with moisture retarding effect, the moisture remains in the screed longer and can no longer escape via the surface. The remaining moisture is dissipated via the edge areas through the natural drying process and can lead to damage there. Calcium sulphate screeds must not be closed off.
3. For floating installation please use the a suitable JOKA underlay incl. aluminium backing. If you decide in favour of an underlay without aluminium backing, a PE film at least 0.2 mm thick must be installed underneath.
4. Holes, cracks and other damage must be repaired before installation using suitable materials.
5. Heating screeds with hot water underfloor heating are suitable up to a maximum surface temperature of 29 °C.

All previous issues are no longer valid on publication of this version! With this information, our intention is to advise you to the best of our knowledge based on the tests we have performed, our experience, the applied standards and the accepted rules of good practice in our trade. The on-site circumstances are not known and must be checked by a specialist, with the construction being adapted if necessary.
W. & L. Jordan GmbH | Horst-Dieter-Jordan-Straße 7-10 | D-34134 Kassel | Tel. +49 56 1 / 941 77 0 | Fax. + 49 56 1 / 941 77 930 | Info@joka.de | http://www.joka.de

Wooden substrates:

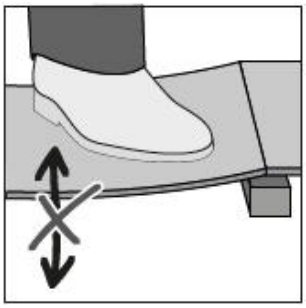

All wood and wood-mix boards without surface treatment are suitable for use under 332 NP Manhattan, provided they are level and free of textures (such as e.g. with plywood or OSB boards). Fasten all loose parts permanently first. To avoid mould formation the hollow chambers must be sufficiently ventilated under the structure and the moisture content of the wood should not exceed 10%. The fitted level must not give or swing under load. The installation direction must be across the old wooden floor boards. A vapour control layer cannot be used in this case.

Please also note the TKB leaflet 10, flooring and parquet work on finished partial screeds – wood-based materials and gypsum fibre boards.

Old coverings:

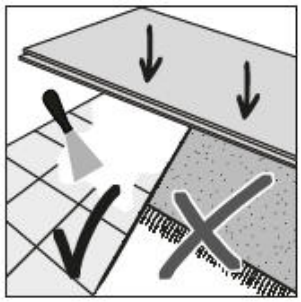

332 NP Manhattan can be installed on most hard coverings. Before 332 NP Manhattan is installed on ceramic tiles, these should be treated with a suitable levelling or filling mass in accordance with the manufacturer's instructions to level the joints. Ask your building chemicals supplier for a recommendation if necessary. In addition it is absolutely necessary to remove textile, elastic and other soft coverings before installing332 NP Manhattan. Floating old coverings must always be removed prior to installation.

The right preparation of the substrate is key to the successful installation 332 NP Manhattan. Unevenness in the substrate can lead to an unsatisfactory appearance or even clear joint formation. Special attention must be paid to the permissible residual moisture of the substrate as well as observance of the climatic conditions in the room, since excessive moisture in the floor covering usually leads to irreparable damage.

All previous issues are no longer valid on publication of this version! With this information, our intention is to advise you to the best of our knowledge based on the tests we have performed, our experience, the applied standards and the accepted rules of good practice in our trade. The on-site circumstances are not known and must be checked by a specialist, with the construction being adapted if necessary.
W. & L. Jordan GmbH | Horst-Dieter-Jordan-Straße 7-10 | D-34134 Kassel | Tel. +49 56 1 / 941 77 0 | Fax. + 49 56 1 / 941 77 930 | Info@joka.de | http://www.joka.de

Installation:

Substrate preparation:
Check the substrate for unevenness. Unevenness of more than 2 mm per metre must be compensated using a suitable levelling mass. If this is not heeded, joints may open, or the overall impression will certainly not be satisfactory.

First, install a PE film 0.2 mm thick. Allow the lengths to overlap by at least 20 cm and mask them using e.g. JK119. Allow the film to rise at the edges, forming a tub (use a blade to cut off the excess film off after the skirting board has been attached). Then install suitable impact sound insulation parallel to the later direction of laminate installation. Alternatively, use a suitable JOKA underlay, which combines impact sound insulation and vapour barrier in one product (e.g. JK 124+).

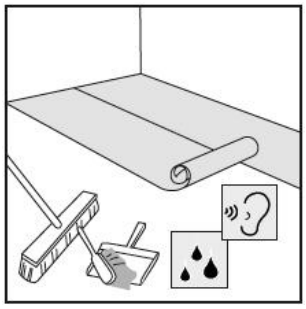

If the installation is on an existing wooden substrate, a vapour control layer may not be used.

To achieve a harmonious appearance, mix the goods from at least three packs or more. Make sure that the natural appearance of the wood results in a harmonious overall appearance. There may be a negative effect on the optical result if this is not heeded.

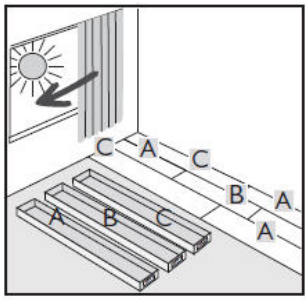

Start installation in accordance with the installation plan in the left-hand corner of the longest room wall with the tongue side facing the wall. In exact alignment with the first element, simply angle the second board in from above and lower it until it lies flat. Continue this until you reach the last element of the first row. Prepare the first three rows for installation. Lay them out to make any necessary adjustments to the adjacent wall. If you need to adjust the elements, please saw from the underside to the top side. If you use a hand saw, please saw from the top side to the underside.

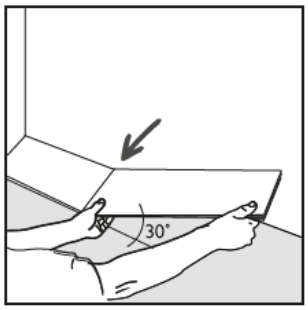

Keep a clearance of at least 10 mm during the first element row and then to all upright construction elements (walls, pillars, heating pipes etc.). This can be achieved using spacer wedges. Non-observance will lead to the floating structure being under tension and will lead to bulging in the floor covering resulting in possible destruction of the floor covering.

All previous issues are no longer valid on publication of this version! With this information, our intention is to advise you to the best of our knowledge based on the tests we have performed, our experience, the applied standards and the accepted rules of good practice in our trade. The on-site circumstances are not known and must be checked by a specialist, with the construction being adapted if necessary.
W. & L. Jordan GmbH | Horst-Dieter-Jordan-Straße 7-10 | D-34134 Kassel | Tel. +49 56 1 / 941 77 0 | Fax. + 49 56 1 / 941 77 930 | Info@joka.de | http://www.joka.de

For all further rows, insert the first element of the row lengthwise into the connection. The tongue is inserted loosely into the groove of the installed element so that the joint is tight on the top side but not yet lowered. Now connect all the other elements of the row at the end. Now lift the first element slightly and join it to the first row at the long edge. Continue until the entire row is connected to the first row. Continue in this way row by row. The piece left at the end of one row can be used to start the new row, but it must be at 20 cm long for this. The same applies for the offset of adjacent end joints.

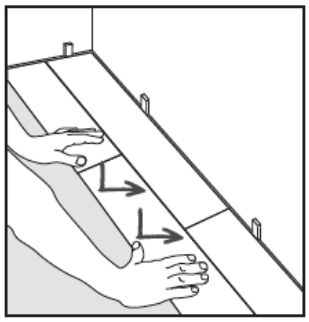

In addition, you have the option of locking the end connection after the long side has been angled in by tapping it in lightly horizontally using a suitable tapping block. Tap from the free end in the direction of the element already in place. Make sure that the height of the elements matches each other.

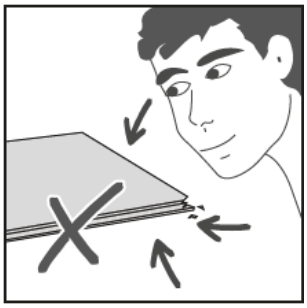

During installation, mix the elements from at least three or more packs and check them for material faults. Elements with visible material faults must not be installed.

Installed elements with visible material faults are excluded from complaints!

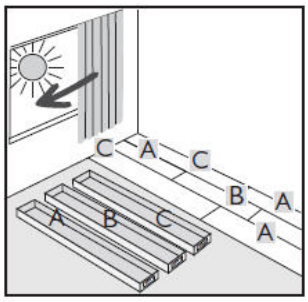

Cut the elements for the last row to size. If the element cannot be angled in from above, cut the nosing of the lower groove face off and apply some watertight D3 white glue. Then simply insert the board. Take the edge spacing to be observed into account here, too.

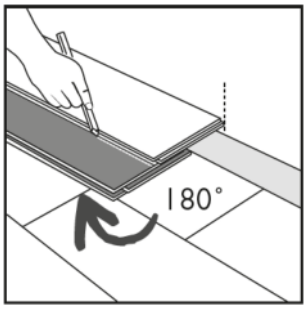

Radiators (or upright construction elements on the area): add approx. 24mm to the diameter of the upright element and cut the element accordingly. You can glue any elements you have to cut through back together again using D3 white glue.

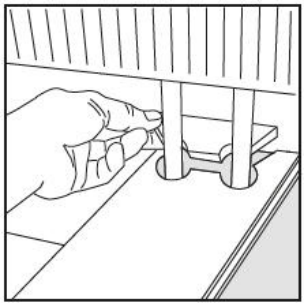

Doors: use an element section or a reversed element to mark the cutting mark on the door frame. Adapt the door frame accordingly using a suitable tool.

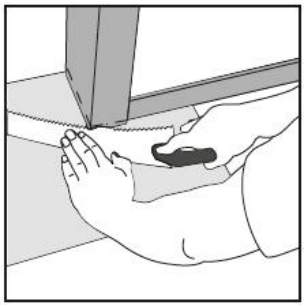

All previous issues are no longer valid on publication of this version! With this information, our intention is to advise you to the best of our knowledge based on the tests we have performed, our experience, the applied standards and the accepted rules of good practice in our trade. The on-site circumstances are not known and must be checked by a specialist, with the construction being adapted if necessary.
W. & L. Jordan GmbH | Horst-Dieter-Jordan-Straße 7-10 | D-34134 Kassel | Tel. +49 56 1 / 941 77 0 | Fax. + 49 56 1 / 941 77 930 | Info@joka.de | http://www.joka.de

Cleaning:

Only use a broom, vacuum cleaner or damp cloths for cleaning.

Cleaning and care of laminate flooring

For cleaning on completion of installation work, first eliminate the coarse dirt by brushing or vacuuming. Damp-wipe laminate flooring using JOKA cleaner (1014). Note the mixing ratio with water of 1:200.
All laminate flooring is equipped with a surface coated ready for use in residential applications (overlay) and a swell-stop coreboard. For this reason, special edge or surface protection is not required in residential applications. In rooms with intensive use (high-frequency residential & commercial areas), an edge sealant with PVAC must be applied during installation for additional moisture protection at the edges.

Further information about e.g. maintenance cleaning can be found in the cleaning and care instructions.

Repairs:

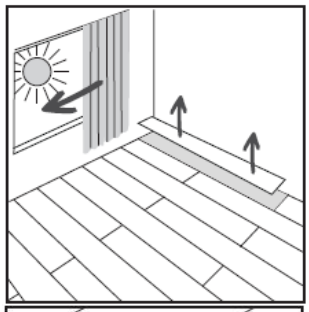

332 NP Manhattan laminate flooring can be repaired easily if damaged. Damage at the edges may be able to be eliminated by removing the damaged element and installing a new one for example. If damage occurs in other places we recommend the following procedure:

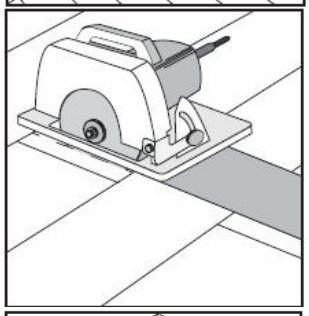

Use a plunge-cut saw and cutting fence to cut the centre of the damaged element out. Be careful in the edge area of the element in order to avoid damaging adjacent elements. Now remove the other element parts from the click mechanism.

To prepare the replacement element, cut the tongue off carefully on both the end and long side, so that the locking groove does not become damaged.

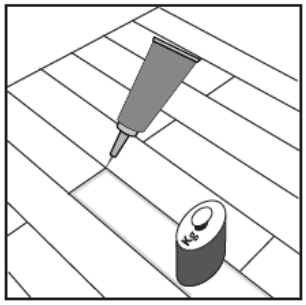

Now apply D3 white glue to the long side and end of the prepared element and on the remaining click mechanism of the adjacent elements. Then insert the prepared element from the groove to the tongue side and weigh it down until the glue has set.

All previous issues are no longer valid on publication of this version! With this information, our intention is to advise you to the best of our knowledge based on the tests we have performed, our experience, the applied standards and the accepted rules of good practice in our trade. The on-site circumstances are not known and must be checked by a specialist, with the construction being adapted if necessary.
W. & L. Jordan GmbH | Horst-Dieter-Jordan-Straße 7-10 | D-34134 Kassel | Tel. +49 56 1 / 941 77 0 | Fax. + 49 56 1 / 941 77 930 | Info@joka.de | http://www.joka.de

Important information:

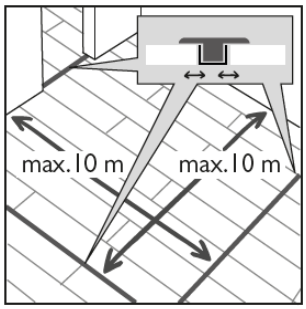

For installation in several rooms, L-shaped rooms, passage areas and large areas from 10 x 10 m in size, a movement joint profile must be used. Also for connected areas, e.g. with several heating circuits, the movement joints present on-site must be taken over identically for the top floor covering. These can be closed using joint profiles (e.g. multi-piece transition profile that does not clamp the floor). Care must be taken that the movement joints to upright construction elements such as supporting pillars and walls are functional. We recommend that you use cork edge strips or similar to fill these areas.

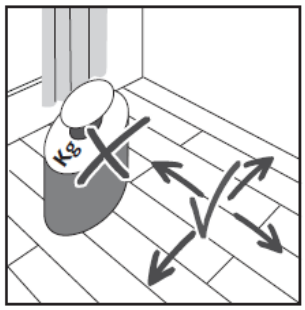

Fixing the floating structure by heavy objects such as kitchen units, ovens, aquariums, water beds etc. must be avoided. If this is unavoidable, the floor covering must be able to expand freely from the fixation in all remaining directions. If this is not heeded, joints may open, or the overall impression will certainly not be satisfactory.

Where office chairs or objects on wheels are used, make sure soft chair or furniture wheels are used. Fit furniture pads to all (moveable) furniture to protect your floor from scratches.

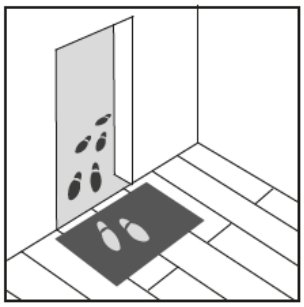

To maintain the value of your floor covering for a long time, we recommend the use of suitable anti-dirt mats in the entrance area and at patio doors. Note the respective manufacturer's specifications.

Generally speaking, floor protection mats are recommended in heavily frequented areas to reduce partial damage or signs of wear.

With laminate flooring it is particularly important to ensure the room climate conditions are correct all year long.

Direct sun radiation can lead to changes in colour. For this reason, sufficient shade should be provided near floor-to-ceiling windows or overhead glazing.

332 NP Manhattan laminate flooring is not suitable for use in wet rooms and saunas.

All previous issues are no longer valid on publication of this version! With this information, our intention is to advise you to the best of our knowledge based on the tests we have performed, our experience, the applied standards and the accepted rules of good practice in our trade. The on-site circumstances are not known and must be checked by a specialist, with the construction being adapted if necessary.
W. & L. Jordan GmbH | Horst-Dieter-Jordan-Straße 7-10 | D-34134 Kassel | Tel. +49 56 1 / 941 77 0 | Fax. + 49 56 1 / 941 77 930 | Info@joka.de | http://www.joka.de